Thermal RC network (Foster)

PSMN4R5-80YSF

SPICE thermal model

Symbol	Parameter	Conditions	Min	Typ	Max	Unit
Rth(j-mb)	thermal resistance from junction to mounting base		-	-	0.63	K/W

Cth1	1.490520E-2	F	Rth1	5.202330E-1	Ω
Cth2	2.100550E-4	F	Rth2	1.410410E-2	Ω
Cth3	5.530500E-3	F	Rth3	4.747180E-2	Ω
Cth4	5.745620E-3	F	Rth4	4.750340E-2	Ω

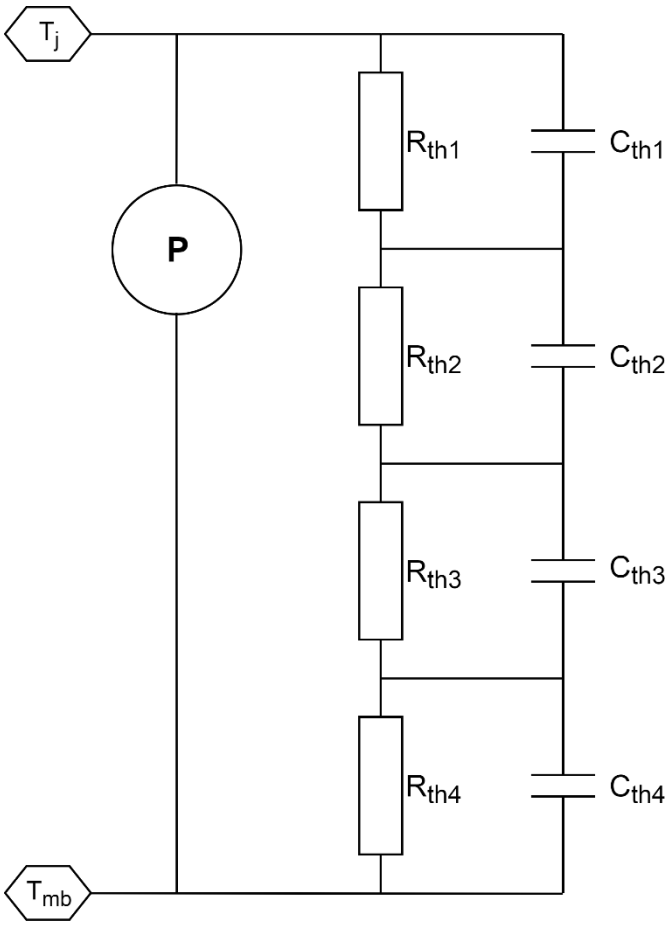

Part Name:	PSMN4R5-80YSF
Date:	15 October 2020

© 2019 Nexperia
All rights reserved. Reproduction in whole or in part is prohibited without prior consent of the copyright owner. The information presented in this document does not form part of any quotation or contract, is believed to be accurate and reliable and may be changed without notice. No liability will be accepted by the publisher for any consequence of it's use. Publication thereof does not convey or imply any license under patent or other industrial or intellectual property rights.