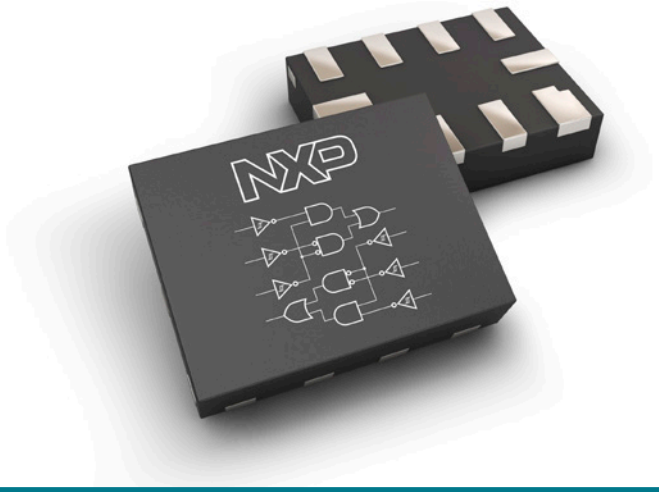

NXP Dual PCB Configurable Logic

Printed circuit board (PCB) configurable Logic function

The NXP dual PCB configurable device is a multi gate, multi function logic device with two configurable gates that can each be individually configured by the PCB layout into one of seven unique functions.

KEY FEATURES

- Wide supply voltage range from 0.8 V to 3.6 V
- ESD protection 5000 V
- Low static power consumption; I_{CC} = 0.9 µA (maximum)
- Latch-up performance exceeds 100 mA per JESD 78 Class II
- Inputs tolerate voltages up to 3.6 V
- Low noise overshoot and undershoot < 10% of VCC
- I_{OFF} circuitry provides partial power-down mode operation
- Specified from -40 °C to +125 °C

BENEFITS

- Two PCB configurable functions in one package
- PCB layout configurable
- Reduces inventory and assembly costs
- High noise immunity
- Wide range of functions (7 x 7)

APPLICATIONS

- Industrial
- Smart phones, tablets, and PCs
- Digital cameras
- Wearables and portable medical devices
- Other low voltage applications

ENDLESS POSSIBILITIES

The NXP dual PCB configurable device is a multi gate, multi function logic device with Schmitt-trigger inputs. Each device contains two configurable gates which can be individually configured into one of seven different functions per device. Each family (-57, -58, -97, -98) device contains a selection of seven logic functions from the total library of 18 unique functions. Some of the basic functions available are; AND, OR, NAND, NOR, XNOR, Inverter, Buffer and Mux. Each family device offers a different variety of available functions. The desired function is selected by how the PCB layout connects the three input pins of each configurable gate.

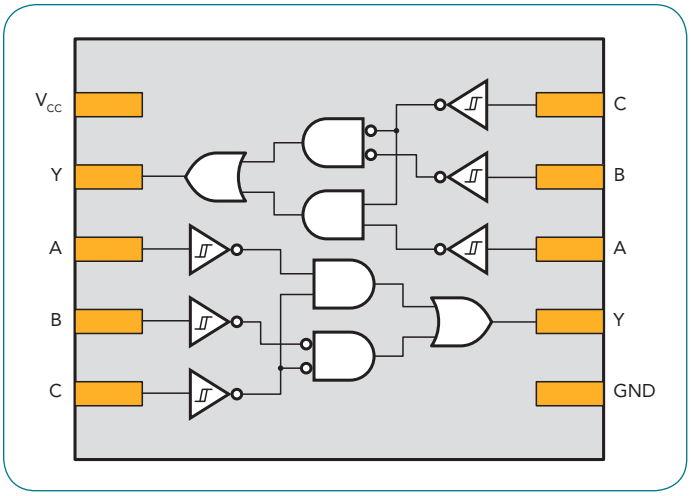

Figure 1. 74AUP2G57 dual PCB configurable logic function block diagram

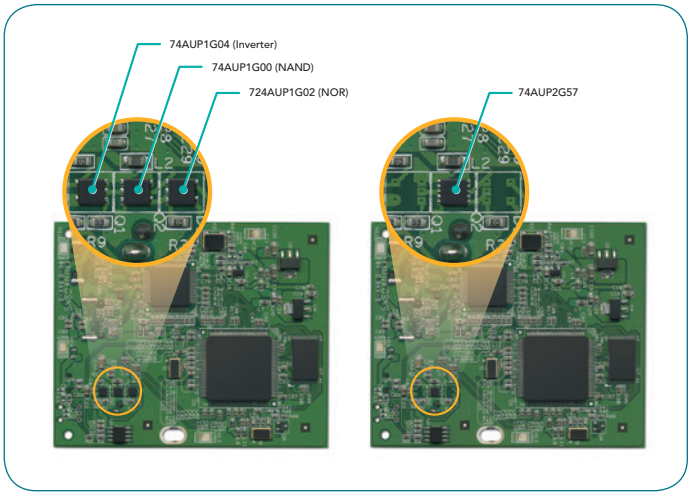

Figure 2. Space saving comparison for dual PCB configurable vs. discrete implementation.

Available functions

74AUP2G57	B C Y B C Y	B C Y B C Y	A C Y A C Y	A C Y A C Y	B C Y	B Y	A Y
74AUP2G58	B C Y B C Y	B C Y B C Y	A C Y A C Y	A C Y A C Y	B C Y	B Y	A Y
74AUP2G97	A C Y	B C Y B C Y	A C Y A C Y	B A C Y	B C Y	B Y	A Y
74AUP2G98	A C Y	B C Y B C Y	A C Y A C Y	B A C Y	B C Y	B Y	A Y

Note: Each family device (-57/-58/-97/-98) implements two independent copies of the above PCB configurable logic gates into one package.

Package suffix	DP	GM	GU	GF
	10-pin (TSSOP)	10-pin (XQFN)	10-pin (XQFN)	10-pin (XSON)
	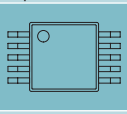			
Package	SOT552-1	SOT1049-1	SOT1160-1	SOT1081-2
Width (mm)	4.90	1.55	1.40	1.00
Length (mm)	3.00	2.00	1.80	1.70
Height (mm)	1.10	0.50	0.50	0.40
Pitch (mm)	0.50	0.50	0.40	0.35

Date of release: October 2014
Document order number: 9397 750 17615
Published in the USA